TEKTRONIX®

P7001
DISPLAY GENERATOR

670-2381-00

SERVICE

INSTRUCTION MANUAL

Tektronix, Inc.
P.O. Box 500
Beaverton, Oregon 97077

Serial Number _____

First Printing APR 1974

070-1608-00

WARRANTY

All TEKTRONIX instruments are warranted against defective materials and workmanship for one year. Any questions with respect to the warranty should be taken up with your TEKTRONIX Field Engineer or representative.

All requests for repairs and replacement parts should be directed to the TEKTRONIX Field Office or representative in your area. This will assure you the fastest possible service. Please include the instrument Type Number or Part Number and Serial Number with all requests for parts or service.

Specifications and price change privileges reserved.

Copyright © 1974 by Tektronix, Inc., Beaverton, Oregon. Printed in the United States of America. All rights reserved. Contents of this publication may not be reproduced in any form without permission of Tektronix, Inc.

U.S.A. and foreign TEKTRONIX products covered by U.S. and foreign patents and/or patents pending.

TEKTRONIX is a registered trademark of Tektronix, Inc.

TABLE OF CONTENTS

	Page
FRONTISPIECE	
CIRCUIT DESCRIPTION	1–4
Introduction	1
Logic Circuits – diagram 9A	1
Bus Controller – diagram 9B	1
Analog Circuits – diagram 9B	2
Vector Generators – diagram 9B	2
Figure 1 (A) Display Generator – Block Diagram (Partial)	3
Figure 1 (B) Display Generator – Block Diagram (Partial)	4
CALIBRATION	5–6
Figure 2 – Location of adjustments on the Display Generator board	5
Figure 3 – XYD waveform display with HORIZ COMP properly adjusted	6
Figure 4 – CAL waveform display with a properly adjusted Display Generator	6
ELECTRICAL PARTS LIST	
DISPLAY GENERATOR COMPONENT LOCATION	
DISPLAY GENERATOR LOGIC SCHEMATIC DIAGRAM 9A	
DISPLAY GENERATOR SCHEMATIC DIAGRAM 9B	
CHANGE INFORMATION	

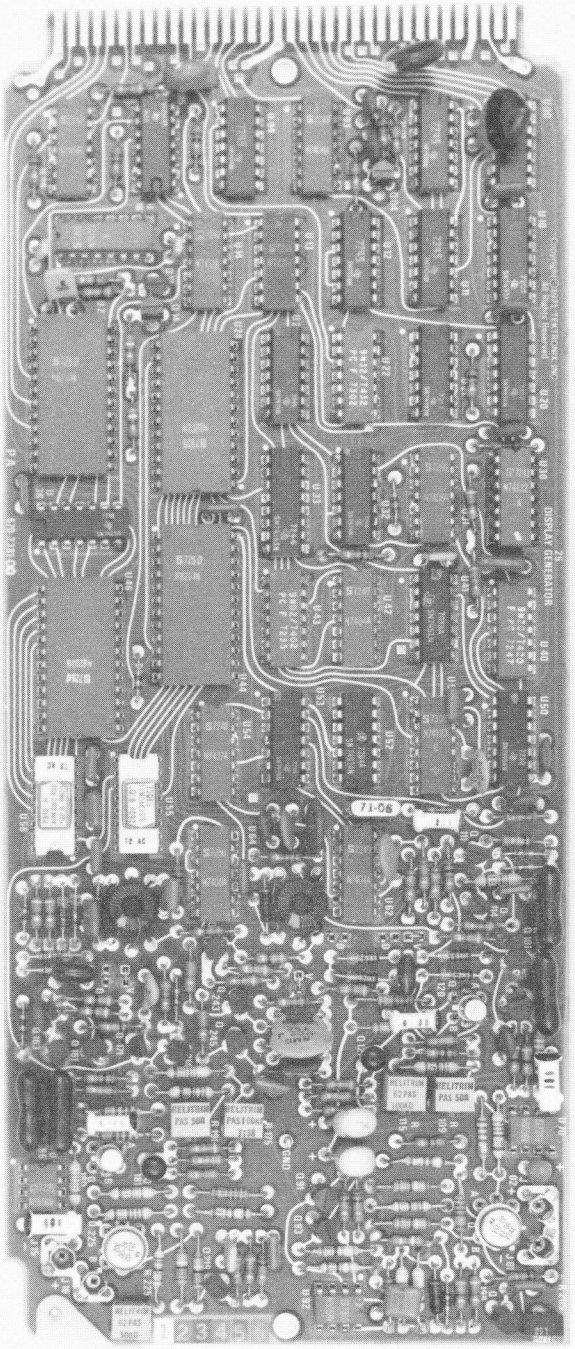

Display Generator Board

P7001
DISPLAY GENERATOR

CIRCUIT DESCRIPTION

The Display Generator converts digital data from the Address and Data Buses to analog signals for the X, Y, and Z axes of a Display Unit. The X output signal is derived from the nine least significant bits of the address, the Y signal from bits five through fourteen of the Data Bus, and Z information from bits three and four of the Data Bus.

LOGIC CIRCUITS

The Display Generator logic is initalized by the POWER FAIL line (B16) diagram 9B. The Status Register (U32A) is set when B16 goes low, and the Bus Controller (U53) is set to its idle state. When B16 goes high, a pulse is generated by U22D and U42E which loads a "0" into the Shift Register (U50). These initial states cause Waveform A to be displayed as soon as the POWER FAIL line goes high. Thereafter, new status words may be entered by pulling the STATUS STROBE line (A17) low or by addressing the Display generator and supplying MASTER SYNC to the bus. The Data Bus information is then loaded into the Status Register and the Shift Register.

Either of two modes of operation, Y-T or X-Y, may be commanded via the coded Status Word and stored in the Status Register. In addition, the STORE command is recognized by the Store Multi (U30), which causes the Display Generator to set all locations of the designated waveforms in Memory to 00. Locations containing no data (00) are ignored during Y-T display mode.

In the Y-T (normal) display mode, the Display Generator examines, in sequence, each memory location of the designated waveform and converts the non-zero points for display. The address information is counted through all displayed waveforms. However, memory access exists only during the display time of the designated waveforms in memory. Counters U10, U20, and U21B, C, & D advance one count each time Memory is interrogated, or every 8 μs during $\overline{\text{WAVEFORM}}$.

The Shift Register (U50) is synchronized to the Address Counter, and shifts once for every 512 addresses. The Shift Register output indicates if the waveform is to be displayed, and enables the appropriate path for the Address Counter input.

The 512th address sets the End-of-Trace Register (U21A). This produces Z axis blanking during retrace by presetting the Z Axis Buffer Register (U23). U21A is cleared by the $\overline{\text{LOAD DISPLAY}}$ and $\overline{\text{Z AXIS}}$ signals at U22B.

The Display Generator logic for the X-Y mode is essentially the same as the Y-T mode. Data is stored by U24 (X), U26 (Y), and U23 (Z) Buffer Registers. After the Inhibit Multi (U51A) times out (≈400 ns), the data is applied to OR gates, U05B, U36, and U14. If the data is non-zero or the X-Y mode is set, the data is held (or stored) until the next display cycle. Then it is shifted into the X, Y, and Z Registers (U44, U46, and U33) for conversion to display information. The X and Y Buffer Registers (U24 and U26) are cleared when the data is loaded into the corresponding display register. The resulting zero data initiates another memory request via U43A when in Y-T mode, or enables new data to be loaded for X-Y display mode.

If only zeros are available when the display cycle starts, the Z Axis Register (U33) is cleared, loading of the Display Registers is inhibited and the Z axis is blanked. The previous data point is therefore held, but not displayed. During Y-T display mode, the Z Buffer Register (U23) is set each time data is entered (except as described for retrace logic), so Z axis information is not required for a display.

During readout, the display is inhibited by the action of the Character Logic stage (U16). U16A is triggered by the READOUT TRIGGER signal. Then, when U16A runs out (approximately 60 μs), if the Display Skip line (A36) is low, U16B is triggered. (DISPLAY SKIP is low when a character is to be displayed). After U16B is triggered, its output disables new data displays by holding the clear input of the Z Register (U33) low (via U14C).

BUS CONTROLLER DIAGRAM 9B

Memory requests are generated by clearing the Bus Controller (U53B) after inputs to U40A provide a logic output. U53A is cleared by the preceding memory cycle. Therefore, a 00 state exists that will pull the $\overline{\text{DATA CH REQUEST}}$ line (A14) low. When DATA CHANNEL GRANT is received, the high level on the D input is clocked

into U53A and the SELECT ACKNOWLEDGE line (B15) is pulled low.

When the DATA CHANNEL GRANT line goes low and BUS BUSY and SYNC ACKNOWLEDGE go high, a "1" is clocked into U53B. The Bus Controller now shifts to its master state. This sets the appropriate address information (via U53, U00, U01, & U11) on the Address Bus, and pulls the CONTROL SYNC line (A11) low approximately 50 ns later. The 50 ns delay is provided by the RC network R31/C31 in the Control Sync Generator (U32B).

When SYNC ACKNOWLEDGE goes low, the data on the buses is shifted into the X, Y, and Z Buffer Registers. The Inhibit Multi (U51A) diagram 9A is triggered to provide a settling time before the data is examined, and time for the next address to ripple through the Address Counter.

The REQUEST INHIBIT command is coupled through OR gate U43D diagram 9B to the clear input of U53A and the set input of U53B. This returns the Bus Controller to the idle state, and $\overline{\text{BUS BUSY}}$ is terminated, freeing the bus. C02 (at pin 13, U43D) serves to hold the $\overline{\text{REQUEST INHIBIT}}$ line low for a short period until the state of DATA REQUEST (pin 5, U40A) is established by the X and Y Buffer Registers (U24 and U26). This prevents U53B from being inadvertently cleared, which would have resulted in setting the Bus Controller to the Bus Request state.

ANALOG CIRCUITS DIAGRAM 9B

The description to this point has covered the access of data from memory (or the Data Bus) and the subsequent transfer of this data to the Display Registers. Each register feeds a D/A Converter, which converts the data to analog information for application to the Display Unit.

The D/A Converter for the Z axis consists of circuits (Q243, Q245, and resistor networks diagram 9A) that pull down the emitter of Q03, 5C on the Z Axis/Front Panel board and established four current levels proportional to the contents of U33B and U33C.

A jumper arrangement is provided to permit selection of either a DOT display or a VECTOR (normal) display. In the DOT display mode, gating signals at the inputs to Q243 and Q245 turn the Z axis off during the first half of each display cycle (to allow settling time).

The normal VECTOR display is a linear interpolation mode that integrates the difference between input and feedback current between successive data points in the X and Y axes. RC networks in the collector circuits of Q243 and Q245 provide integration of the Z Axis signal for the VECTOR mode.

VECTOR GENERATORS DIAGRAM 9B

The X and Y Axis Vector Generators are identical in operation. The following description of operation of the X Axis may be applied to the Y Axis when corresponding part numbers are substituted.

The vector generator is a sampled feedback system with an 8 μs period. A 2-MHz Clock (U62D & E) diagram 9A is divided by U52 to 125 kHz and applied to U51B. U51B generates STROBE pulses which load new data (if required) into the X Display Register (U44) to drive the X Axis D-A Converter (U55) and turn on sampling gate CR 151, 153, 155, and 157 diagram 9B through Q133 and T150 at the beginning of each 8 μs period. C150 and VR150 provide a reverse bias to the sampling gate diodes when the gate is off.

When the sampling gate is closed (on), the voltage on C185/C186 is applied to C184, where it is stored while the gate is open. This stored voltage is applied to the gate of Q180A. Q180 operates in conjunction with Q161 and Q163 to hold the voltage (across R186 and R190) at the gate of Q180B essentially equal to that at Q180A. This action steers a portion of the current from Q93 (set by U92B, establishing equal voltages across R93 and R95) through Q163. The remainder of the current from Q93 passes through Q161 to the junction of C185, C186, and Q171. R185, R187, and C187 provide positive ac feedback to C184 to establish a voltage on C184 equal to that on C185 despite sampling gate losses.

Since the current through Q93 is fixed, and the current through Q163 proportional to the voltage at C185, the current through Q161 is inversely proportional to the voltage across C184. If the current through Q171 is held constant, the current through Q161 will be adjusted (at 8μs intervals) to an equal value, so the change in charge on C185 causes increased current through Q163 and reduced current through Q161.

If the current through Q171 (supplied by the X Axis D-A, U55) is changed simultaneously with the sampling of the voltage across C185, a difference current will be supplied by C185/C186. This constant current will result in a linear voltage change across C185/C186 until the next sample is taken. The values of C185/C186, R186 and R190 are adjusted so that the voltage change during each display cycle results in a precisely compensating change in current through Q161 at the end of the cycle. This results in an equilibrium voltage across C185/C186 proportional to the D-A output current, and linear changes from one equilibrium value to the next.

Q214 serves to reduce the impedance at the emitter of Q171, while R173 and R175 provide an adjustable standing current for horizontal centering.

The voltage across C185/C186 is supplied through a low-pass filter (R70 and C70) to the input of a voltage follower (U86). The output of U86 is applied to a differential transconductance amplifier (Q225 and Q219) resulting in a differential current output at J15 and J16.

In the DOT mode of operation, the sampling gate is disabled by disconnecting C184, C185/C186 and bypassing the diode bridge. The feedback loop operates much as before, but on a continuous basis. The Z axis is turned off each time new data is applied to the D-A (U55), and remains off for 4 μs. The new level at the input of U86 will be established in a relatively short time (since the time constant is reduced), and will follow an exponential curve due to the continuous feedback. After the voltage at U86 is settled, the Z axis is turned on for 4 μs to display the point.

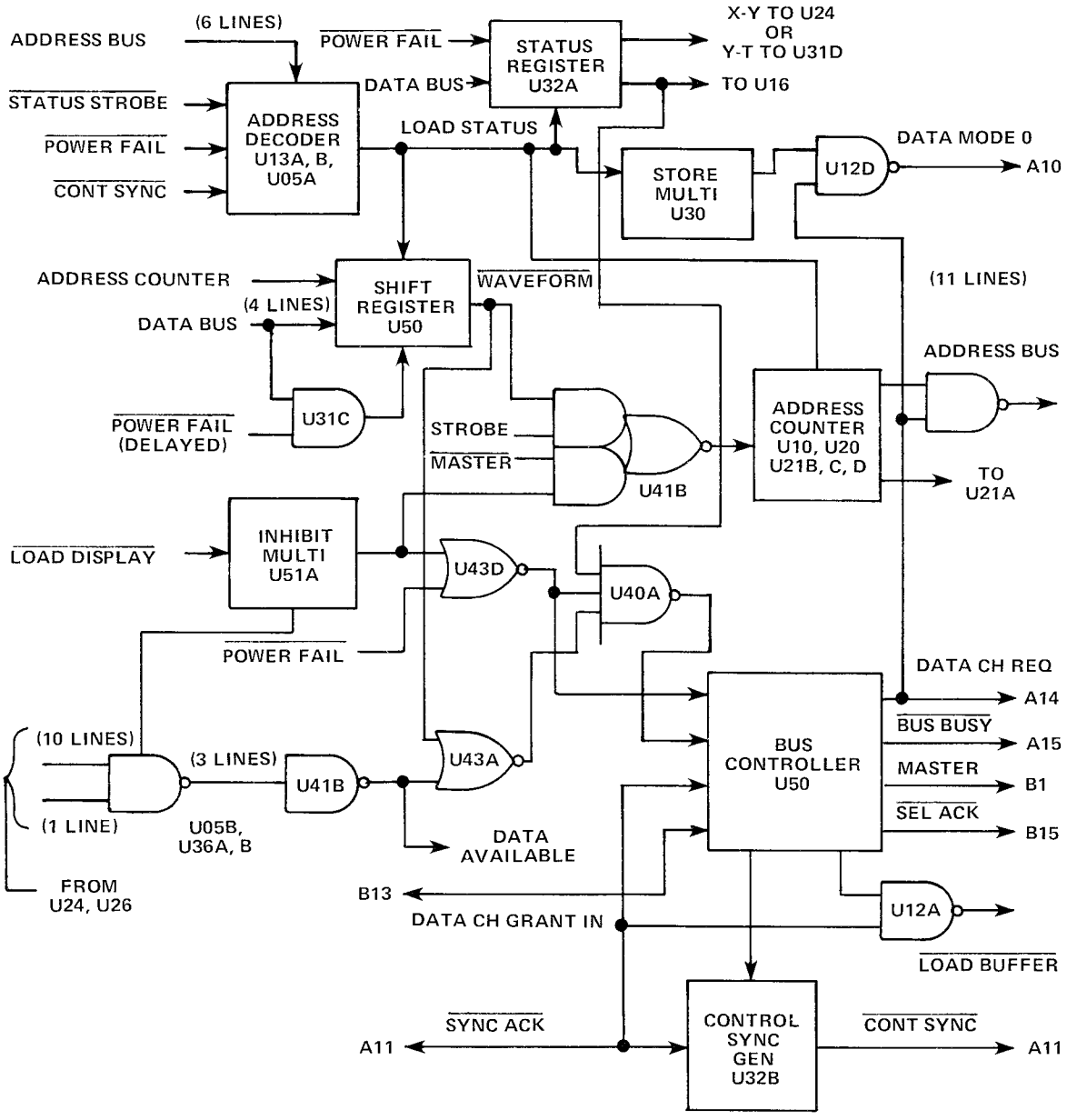

Fig. 1 (A). Display Generator Block Diagram (Partial)

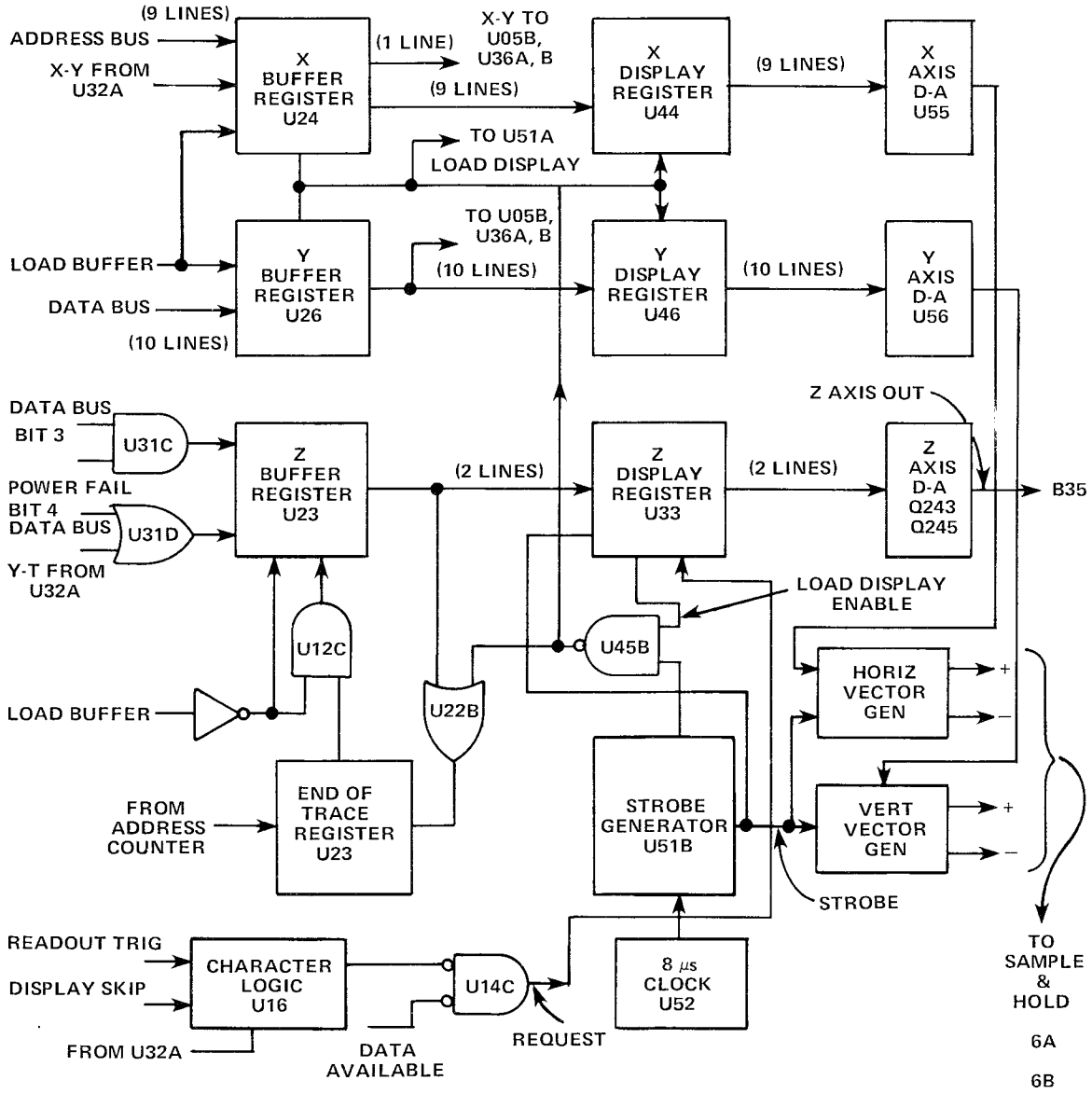

Fig. 1(B). Display Generator Block Diagram (Partial)

CALIBRATION PROCEDURE

Calibration of the Display Generator board involves the adjustment of six potentiometers, labeled VERT BAL (R115), VERT COMP (R109), VERT GAIN (R205), and HORIZ BAL (R175), HORIZ COMP (R190), HORIZ GAIN (R225) on the schematic 9B . The procedure requires the use of Tektronix P7001 Checkout Software for use with PDP-11.

Two test waveforms will be used, Calibrate Waveform (CAL), and X-Y Display Waveform (XYD). The Zero Display Generator Test (ZDG) may then be applied as a performance check on the Display Generator.

All adjustments are easily reached by swinging out the Front Panel (see procedure in Front Panel & Z Axis/Front Panel manual). Location of the adjustments is shown in Fig. 2.

1. With the P7001 Checkout Software, load the CAL waveform in MEMORY LOCATION A.

2. Allow at least 20 minutes warm-up time for the P7001 before making any adjustments. Set the P7001 front-panel buttons as follows:

DISPLAY SOURCE:	MEMORY
DATA HANDLING:	HOLD
MEMORY LOCATION:	A
PROGRAM CALL:	none

3. With the P7001 Checkout Software, select the XYD waveform as the display. The waveform is computer-generated, and the Display Generator is in the X-Y mode. The waveform is not stored in memory upon completion of the test.

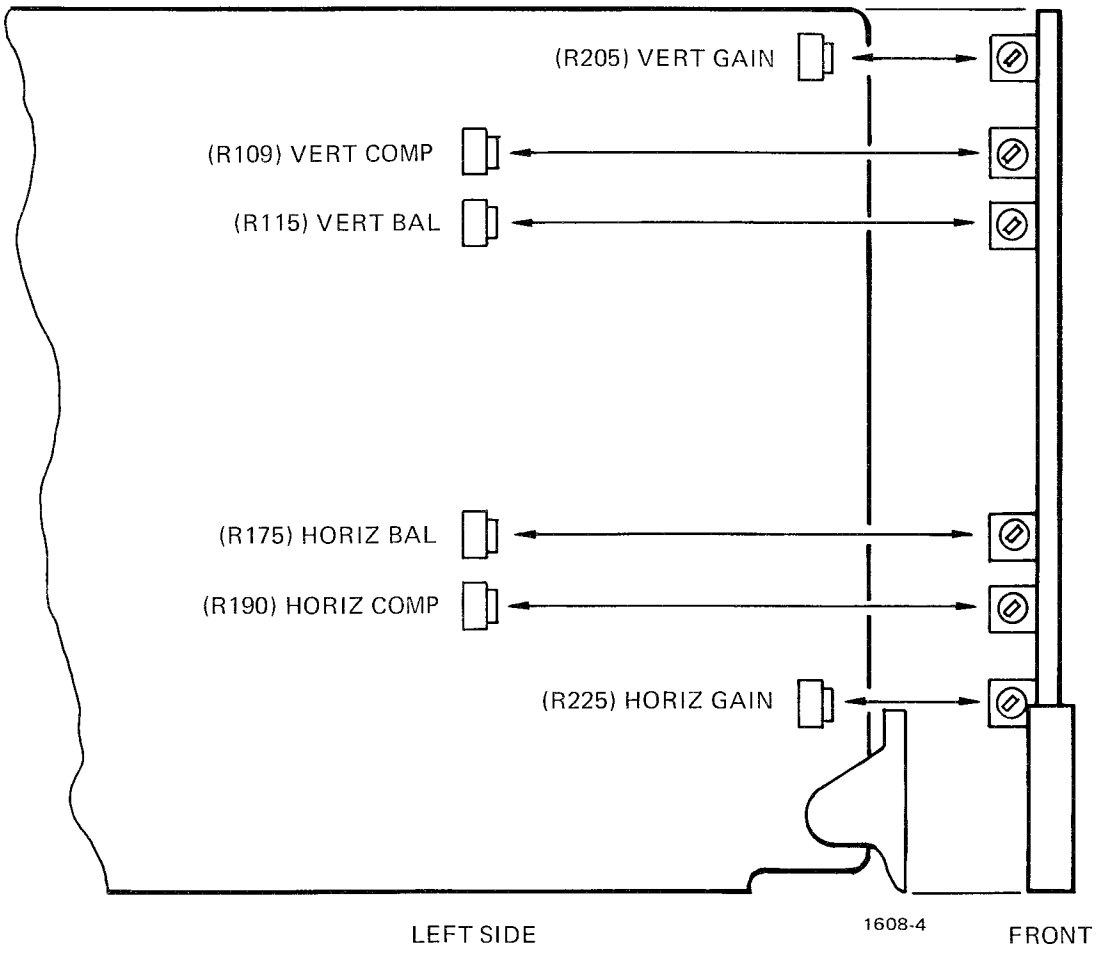

Fig. 2. Location of adjustments on the Display Generator board.

Observing the Display Unit Screen, adjust HORIZ COMP (R190) so that the crossing-line pattern gives the best approximation of an "X". Fig. 3 shows a properly adjusted display.

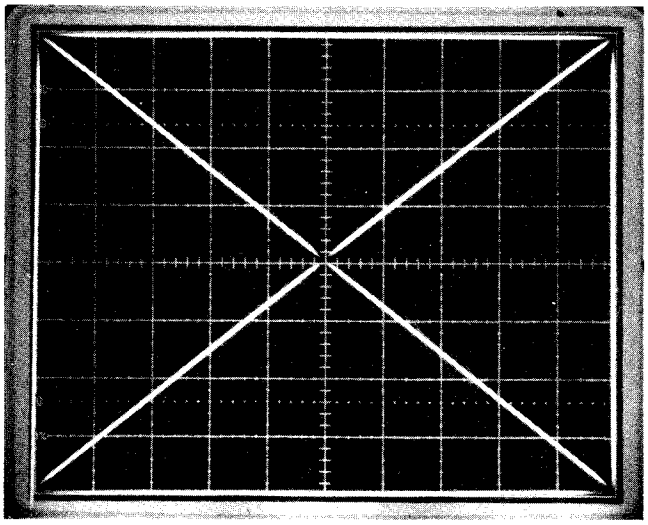

Fig. 3. XYD waveform display with HORIZ COMP (R190) properly adjusted.

4. Cancel the XYD waveform and observe the CAL waveform in MEMORY LOCATION A.

Adjust HORIZ BAL (R175) and HORIZ GAIN (R225) for horizontal alignment of the CAL waveform with the center 8 divisions of the graticule. The CAL display left-most and right-most crt divisions may have up to 0.1 division of compression or expansion while the display matches all other graticule lines. Note that HORIZ BAL affects horizontal position, while HORIZ GAIN affects spacing between the CAL waveform steps.

5. Adjust VERT COMP (R109) so that the first two (brightened) steps of the CAL waveform are flat.

6. Adjust VERT BAL (R115) and VERT GAIN (R205) for vertical alignment of the CAL waveform with the graticule. The top and bottom steps may have up to 0.1 division of compression or expansion when all other levels match their respective graticule lines.

7. Readjust HORIZ BAL and HORIZ GAIN as necessary, following the procedure outlined in Step 4. Take care not to disturb settings of the compensation controls, R109 and R190. Fig. 4 shows the CAL waveform with a properly adjusted Display Generator.

If a performance check of the Display Generator is desired, please refer to the P7001 Checkout Software manual (070-1612-00) for procedures.

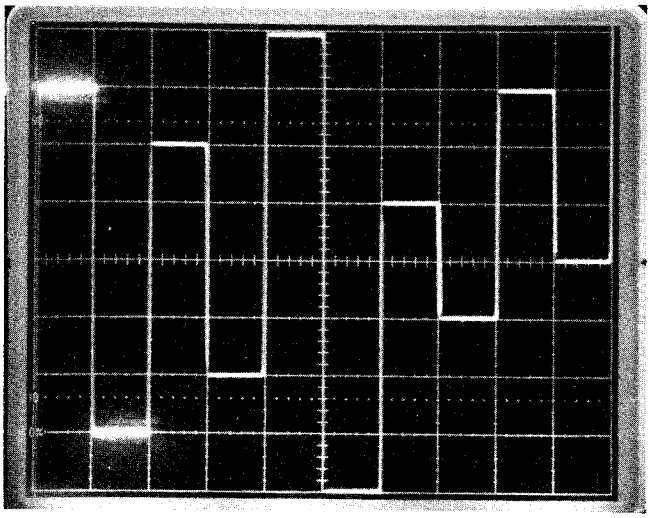

Fig. 4. CAL waveform display with a properly adjusted Display Generator.

REPLACEABLE PARTS

PARTS ORDERING INFORMATION

Replacement parts are available from or through your local Tektronix, Inc. Field Office or representative.

Changes to Tektronix instruments are sometimes made to accommodate improved components as they become available, and to give you the benefit of the latest circuit improvements developed in our engineering department. It is therefore important, when ordering parts, to include the following information in your order: Part number, instrument type or number, serial number, and modification number if applicable.

If a part you have ordered has been replaced with a new or improved part, your local Tektronix, Inc. Field Office or representative will contact you concerning any change in part number.

Change information, if any, is located at the rear of this manual.

SPECIAL NOTES AND SYMBOLS

X000	Part first added at this serial number
00X	Part removed after this serial number

ITEM NAME

In the Parts List, an Item Name is separated from the description by a colon (:). Because of space limitations, an Item Name may sometimes appear as incomplete. For further Item Name identification, the U.S. Federal Cataloging Handbook H6-1 can be utilized where possible.

ABBREVIATIONS

ACTR	ACTUATOR	PLSTC	PLASTIC
ASSY	ASSEMBLY	QTZ	QUARTZ
CAP	CAPACITOR	RECP	RECEPTACLE
CER	CERAMIC	RES	RESISTOR
CKT	CIRCUIT	RF	RADIO FREQUENCY
COMP	COMPOSITION	SEL	SELECTED
CONN	CONNECTOR	SEMICOND	SEMICONDUCTOR
ELCTLT	ELECTROLYTIC	SENS	SENSITIVE
ELEC	ELECTRICAL	VAR	VARIABLE
INCAND	INCANDESCENT	WW	WIREWOUND
LED	LIGHT EMITTING DIODE	XFMR	TRANSFORMER
NONWIR	NON WIREWOUND	XTAL	CRYSTAL

CROSS INDEX MFR. CODE NUMBER TO MANUFACTURER

MFR.CODE	MANUFACTURER	ADDRESS	CITY,STATE,ZIP
00853	SANGAMO ELECTRIC CO., S. CAROLINA DIV.	P. O. BOX 128	PICKENS, SC 29671
01121	ALLEN-BRADLEY CO.	1201 2ND ST. SOUTH	MILWAUKEE, WI 53204
01295	TEXAS INSTRUMENTS, INC., SEMICONDUCTOR GROUP	P. O. BOX 5012	DALLAS, TX 75222
04713	MOTOROLA, INC., SEMICONDUCTOR PRODUCTS DIV.	5005 E. MCDOWELL RD.	PHOENIX, AZ 85036
06665	PRECISION MONOLITHICS INC.	1500 SPACE PARK DR.	SANTA CLARA, CA 95050
07263	FAIRCHILD SEMICONDUCTOR, A DIV. OF FAIRCHILD CAMERA AND INSTRUMENT CORP.	464 ELLIS ST.	MOUNTAIN VIEW, CA 94042
07910	TELEDYNE SEMICONDUCTOR	12515 CHADRON AVE.	HAWTHORNE, CA 90250
12040	NATIONAL SEMICONDUCTOR CORP.	COMMERCE DRIVE	DANBURY, CT 06810
13715	FAIRCHILD SEMICONDUCTOR, A DIV. OF FAIRCHILD CAMERA AND INSTRUMENT CORP.	4300 REDWOOD HWY.	SAN RAFAEL, CA 94903
18324	SIGNETICS CORP.	811 E. ARQUES	SUNNYVALE, CA 94086
27014	NATIONAL SEMICONDUCTOR CORP.	2900 SAN YSIDRO WAY	SANTA CLARA, CA 95051
56289	SPRAGUE ELECTRIC CO.		NORTH ADAMS, MA 01247
72136	ELECTRO MOTIVE CORP., SUB OF INTERNATIONAL ELECTRONICS CORP.	SOUTH PARK AND JOHN STREETS	WILLIMANTIC, CT 06226
72982	ERIE TECHNOLOGICAL PRODUCTS, INC.	644 W. 12TH ST.	ERIE, PA 16512
73138	BECKMAN INSTRUMENTS, INC., HELIPOT DIV.	2500 HARBOR BlVD.	FULLERTON, CA 92634
75042	TRW ELECTRONIC COMPONENTS, IRC FIXED RESISTORS, PHILADELPHIA DIVISION	401 N. BROAD ST.	PHILADELPHIA, PA 19108
80009	TEKTRONIX, INC.	P. O. BOX 500	BEAVERTON, OR 97077
81483	INTERNATIONAL RECTIFIER CORP.	9220 SUNSET BlVD.	LOS ANGELES, CA 90069
90201	MALLORY CAPACITOR CO., DIV. OF P. R. MALLORY CO., INC.	3029 E. WASHINGTON ST.	INDIANAPOLIS, IN 46206

ELECTRICAL PARTS

Ckt No.	Tektronix Part No.	Serial/Model No. Eff	Dscont	Name & Description	Mfr Code	Mfr Part Number
	670-2381-00	B010100	B060271	CKT CARD ASSY:DISPLAY GEN	80009	670-2381-00
	670-2381-01	B060272		CKT CARD ASSY:DISPLAY GEN	80009	670-2381-01
C02	283-0067-00			CAP.,FXD,CER DI:0.001UF,10%,200V	72982	835-515B102K
C04	283-0150-00			CAP.,FXD,CER DI:650PF,5%,200V	72982	835-515B651J
C15	283-0238-00			CAP.,FXD,CER DI:0.01UF,10%,50V	72982	8121N071WR5103K
C16	283-0238-00			CAP.,FXD,CER DI:0.01UF,10%,50V	72982	8121N071WR5103K
C21	283-0150-00			CAP.,FXD,CER DI:650PF,5%,200V	72982	835-515B651J
C23	283-0010-00	B010100	B039999	CAP.,FXD,CER DI:0.05UF,+100-20%,50V	56289	273C20
C23	283-0111-00	B040000		CAP.,FXD,CER DI:0.1UF,20%,50V	72982	8131N075651104M
C24	283-0010-00	B010100	B039999	CAP.,FXD,CER DI:0.05UF,+100-20%,50V	56289	273C20
C24	283-0111-00	B040000		CAP.,FXD,CER DI:0.1UF,20%,50V	72982	8131N075651104M
C26	283-0010-00	B010100	B039999	CAP.,FXD,CER DI:0.05UF,+100-20%,50V	56289	273C20
C26	283-0111-00	B040000		CAP.,FXD,CER DI:0.1UF,20%,50V	72982	8131N075651104M
C27	283-0010-00	B010100	B039999	CAP.,FXD,CER DI:0.05UF,+100-20%,50V	56289	273C20
C27	283-0111-00	B040000		CAP.,FXD,CER DI:0.1UF,20%,50V	72982	8131N075651104M
C30	283-0212-00	B010100	B060271	CAP.,FXD,CER DI:2UF,20%,50V	72982	8141050651205M
C30	290-0524-00	B060272		CAP.,FXD,ELCTLT:4.7UF,20%,10V	90201	TDC475M010EL
C31	283-0047-00			CAP.,FXD,CER DI:270PF,5%,500V	72982	861-518B271J
C37	283-0104-00			CAP.,FXD,CER DI:2000PF,5%,500V	72982	811-565B202J
C40	290-0532-00			CAP.,FXD,ELCTLT:150UF,20%,6V	90201	TDC157M006CL
C41	283-0010-00	B010100	B039999	CAP.,FXD,CER DI:0.05UF,+100-20%,50V	56289	273C20
C41	283-0111-00	B040000		CAP.,FXD,CER DI:0.1UF,20%,50V	72982	8131N075651104M
C42	283-0010-00	B010100	B039999	CAP.,FXD,CER DI:0.05UF,+100-20%,50V	56289	273C20
C42	283-0111-00	B040000		CAP.,FXD,CER DI:0.1UF,20%,50V	72982	8131N075651104M
C43	283-0010-00	B010100	B039999	CAP.,FXD,CER DI:0.05UF,+100-20%,50V	56289	273C20
C43	283-0111-00	B040000		CAP.,FXD,CER DI:0.1UF,20%,50V	72982	8131N075651104M
C45	283-0010-00	B010100	B039999	CAP.,FXD,CER DI:0.05UF,+100-20%,50V	56289	273C20
C45	283-0111-00	B040000		CAP.,FXD,CER DI:0.1UF,20%,50V	72982	8131N075651104M
C50	283-0150-00			CAP.,FXD,CER DI:650PF,5%,200V	72982	835-515B651J
C51	283-0060-00			CAP.,FXD,CER DI:100PF,5%,200V	72982	855-535U2J101J
C52	281-0562-00			CAP.,FXD,CER DI:39PF,10%,500V	72982	301-000U2J0390K
C56	283-0010-00	B010100	B039999	CAP.,FXD,CER DI:0.05UF,+100-20%,50V	56289	273C20
C56	283-0111-00	B040000		CAP.,FXD,CER DI:0.1UF,20%,50V	72982	8131N075651104M
C59	283-0010-00	B010100	B039999	CAP.,FXD,CER DI:0.05UF,+100-20%,50V	56289	273C20
C59	283-0111-00	B040000		CAP.,FXD,CER DI:0.1UF,20%,50V	72982	8131N075651104M
C62	283-0023-00			CAP.,FXD,CER DI:0.1UF,+80-20%,10V	56289	20C374
C65	283-0032-00			CAP.,FXD,CER DI:470PF,5%,500V	72982	831-500Z5D471J
C70	281-0622-00			CAP.,FXD,CER DI:47PF,1%,500V	72982	308-000C0G0470F
C86	281-0622-00			CAP.,FXD,CER DI:47PF,1%,500V	72982	308-000C0G0470F
C87	290-0517-00			CAP.,FXD,ELCTLT:6.8UF,20%,35V	56289	196D685X0035KA1
C90	283-0177-00			CAP.,FXD,CER DI:1UF,+80-20%,25V	72982	8131N039651105Z
C92	283-0010-00	B010100	B039999	CAP.,FXD,CER DI:0.05UF,+100-20%,50V	56289	273C20
C92	283-0111-00	B040000		CAP.,FXD,CER DI:0.1UF,20%,50V	72982	8131N075651104M
C100	283-0076-01			CAP.,FXD,CER DI:27PF,+/-10%,500V	72982	831-592S2L270K
C105	283-0695-00			CAP.,FXD,MICA D:4440PF,1%,300V	72136	DM19F4441F0300
C106	283-0695-00			CAP.,FXD,MICA D:4440PF,1%,300V	72136	DM19F4441F0300
C107	283-0599-00			CAP.,FXD,MICA D:98PF,5%,500V	00853	D105E980J0
C111	283-0076-01			CAP.,FXD,CER DI:27PF,+/-10%,500V	72982	831-592S2L270K
C113	283-0010-00	B010100	B039999	CAP.,FXD,CER DI:0.05UF,+100-20%,50V	56289	273C20
C113	283-0111-00	B040000		CAP.,FXD,CER DI:0.1UF,20%,50V	72982	8131N075651104M
C127	281-0500-00			CAP.,FXD,CER DI:2.2PF,+/-0.5PF,500V	72982	301-000C0J0229D
C139	283-0177-00			CAP.,FXD,CER DI:1UF,+80-20%,25V	72982	8131N039651105Z

Ckt No.	Tektronix Part No.	Serial/Model No. Eff	Dscont	Name & Description	Mfr Code	Mfr Part Number
C140	283-0203-00			CAP.,FXD,CER DI:0.47UF,20%,50V	72982	8131N075651474M
C150	283-0203-00			CAP.,FXD,CER DI:0.47UF,20%,50V	72982	8131N075651474M
C160	283-0076-01			CAP.,FXD,CER DI:27PF,+/-10%,500V	72982	831-592S2L270K
C171	283-0076-01			CAP.,FXD,CER DI:27PF,+/-10%,500V	72982	831-592S2L270K
C173	283-0010-00	B010100	B039999	CAP.,FXD,CER DI:0.05UF,+100-20%,50V	56289	273C20
C173	283-0111-00	B040000		CAP.,FXD,CER DI:0.1UF,20%,50V	72982	8131N075651104M
C184	283-0599-00			CAP.,FXD,MICA D:98PF,5%,500V	00853	D105E980J0
C185	283-0695-00			CAP.,FXD,MICA D:4440PF,1%,300V	72136	DM19F4441F0300
C186	283-0695-00			CAP.,FXD,MICA D:4440PF,1%,300V	72136	DM19F4441F0300
C187	281-0534-00			CAP.,FXD,CER DI:3.3PF,+/-0.25PF,500V	72982	301-000C0J0339C
C200	283-0010-00	B010100	B039999	CAP.,FXD,CER DI:0.05UF,+100-20%,50V	56289	273C20
C200	283-0111-00	B040000		CAP.,FXD,CER DI:0.1UF,20%,50V	72982	8131N075651104M
C220	283-0010-00	B010100	B039999	CAP.,FXD,CER DI:0.05UF,+100-20%,50V	56289	273C20
C220	283-0111-00	B040000		CAP.,FXD,CER DI:0.1UF,20%,50V	72982	8131N075651104M
C230	290-0519-00			CAP.,FXD,ELCTLT:100UF,20%,20V	56289	196D107X0020MA3
C231	290-0529-00			CAP.,FXD,ELCTLT:47UF,20%,20V	56289	196D476X0020LA3
C233	290-0529-00			CAP.,FXD,ELCTLT:47UF,20%,20V	56289	196D476X0020LA3
C234	290-0519-00			CAP.,FXD,ELCTLT:100UF,20%,20V	56289	196D107X0020MA3
C247	283-0104-00			CAP.,FXD,CER DI:2000PF,5%,500V	72982	811-565B202J
C249	283-0114-00			CAP.,FXD,CER DI:0.0015UF,5%,200V	72982	805-509B152J
CR30	152-0141-02			SEMICOND DEVICE:SILICON,30V,150MA	07910	1N4152
CR33	152-0141-02	XB060272		SEMICOND DEVICE:SILICON,30V,150MA	07910	1N4152
CR55	152-0141-02			SEMICOND DEVICE:SILICON,30V,150MA	07910	1N4152
CR56	152-0141-02			SEMICOND DEVICE:SILICON,30V,150MA	07910	1N4152
CR90	152-0141-02			SEMICOND DEVICE:SILICON,30V,150MA	07910	1N4152
CR110	152-0141-02			SEMICOND DEVICE:SILICON,30V,150MA	07910	1N4152
CR111	152-0141-02			SEMICOND DEVICE:SILICON,30V,150MA	07910	1N4152
CR112	152-0141-02			SEMICOND DEVICE:SILICON,30V,150MA	07910	1N4152
CR141	152-0153-00			SEMICOND DEVICE:SILICON,15V,50MA	13715	FD7003
CR143	152-0153-00			SEMICOND DEVICE:SILICON,15V,50MA	13715	FD7003
CR145	152-0153-00			SEMICOND DEVICE:SILICON,15V,50MA	13715	FD7003
CR147	152-0153-00			SEMICOND DEVICE:SILICON,15V,50MA	13715	FD7003
CR151	152-0153-00			SEMICOND DEVICE:SILICON,15V,50MA	13715	FD7003
CR153	152-0153-00			SEMICOND DEVICE:SILICON,15V,50MA	13715	FD7003
CR155	152-0153-00			SEMICOND DEVICE:SILICON,15V,50MA	13715	FD7003
CR157	152-0153-00			SEMICOND DEVICE:SILICON,15V,50MA	13715	FD7003
CR171	152-0141-02			SEMICOND DEVICE:SILICON,30V,150MA	07910	1N4152
J01	131-1003-00			CONNECTOR BODY,:CKT BD MT,3 PRONG	80009	131-1003-00
J02	131-1003-00			CONNECTOR BODY,:CKT BD MT,3 PRONG	80009	131-1003-00
J15	131-1003-00			CONNECTOR BODY,:CKT BD MT,3 PRONG	80009	131-1003-00
J16	131-1003-00			CONNECTOR BODY,:CKT BD MT,3 PRONG	80009	131-1003-00
Q04	151-0192-00			TRANSISTOR:SILICON,NPN,SEL FROM MPS6521	80009	151-0192-00
Q14	151-0192-00			TRANSISTOR:SILICON,NPN,SEL FROM MPS6521	80009	151-0192-00
Q17	151-0192-00			TRANSISTOR:SILICON,NPN,SEL FROM MPS6521	80009	151-0192-00
Q91	151-0216-00			TRANSISTOR:SILICON,PNP	04713	MPS6523
Q93	151-0216-00			TRANSISTOR:SILICON,PNP	04713	MPS6523
Q101	151-0220-00			TRANSISTOR:SILICON,PNP	80009	151-0220-00
Q103	151-0220-00			TRANSISTOR:SILICON,PNP	80009	151-0220-00
Q111	151-0192-00			TRANSISTOR:SILICON,NPN,SEL FROM MPS6521	80009	151-0192-00
Q114	151-0192-00			TRANSISTOR:SILICON,NPN,SEL FROM MPS6521	80009	151-0192-00
Q120	151-1049-00			TRANSISTOR:SILICON,JFE,NCHANNEL	80009	151-1049-00
Q121	151-0225-00	B010100	B060271	TRANSISTOR:SILICON,NPN	07910	CS23365

Ckt No.	Tektronix Part No.	Serial/Model No. Eff	Dscont	Name & Description	Mfr Code	Mfr Part Number
Q121	151-0283-00	B060272		TRANSISTOR:SILICON,NPN	07263	S032790
Q133	151-0225-00			TRANSISTOR:SILICON,NPN	07910	CS23365
Q161	151-0220-00			TRANSISTOR:SILICON,PNP	80009	151-0220-00
Q163	151-0220-00			TRANSISTOR:SILICON,PNP	80009	151-0220-00
Q171	151-0192-00			TRANSISTOR:SILICON,NPN,SEL FROM MPS6521	80009	151-0192-00
Q180	151-1049-00			TRANSISTOR:SILICON,JFE,NCHANNEL	80009	151-1049-00
Q181	151-0225-00	B010100	B060271	TRANSISTOR:SILICON,NPN	07910	CS23365
Q181	151-0283-00	B060272		TRANSISTOR:SILICON,NPN	07263	S032790
Q199	151-0220-00			TRANSISTOR:SILICON,PNP	80009	151-0220-00
Q205	151-0261-00	B010100	B060271	TRANSISTOR:SILICON,PNP,DUAL	12040	NS7410
Q205	151-0307-00	B060272		TRANSISTOR:SILICON,PNP,DUAL	07263	SP13404
Q214	151-0192-00			TRANSISTOR:SILICON,NPN,SEL FROM MPS6521	80009	151-0192-00
Q219	151-0220-00			TRANSISTOR:SILICON,PNP	80009	151-0220-00
Q225	151-0261-00	B010100	B060271	TRANSISTOR:SILICON,PNP,DUAL	12040	NS7410
Q225	151-0307-00	B060272		TRANSISTOR:SILICON,PNP,DUAL	07263	SP13404
Q243	151-0225-00			TRANSISTOR:SILICON,NPN	07910	CS23365
Q245	151-0225-00			TRANSISTOR:SILICON,NPN	07910	CS23365
R03	315-0102-00			RES.,FXD,CMPSN:1K OHM,5%,0.25W	01121	CB1025
R04	315-0181-00			RES.,FXD,CMPSN:180 OHM,5%,0.25W	01121	CB1815
R10	315-0510-00			RES.,FXD,CMPSN:51 OHM,5%,0.25W	01121	CB5105
R11	315-0510-00	B010100	B060271	RES.,FXD,CMPSN:51 OHM,5%,0.25W	01121	CB5105
R11	315-0151-00	B060272		RES.,FXD,CMPSN:150 OHM,5%,0.25W	01121	CB1515
R12	315-0471-00			RES.,FXD,CMPSN:470 OHM,5%,0.25W	01121	CB4715
R14	315-0391-00			RES.,FXD,CMPSN:390 OHM,5%,0.25W	01121	CB3915
R15	315-0163-00			RES.,FXD,CMPSN:16K OHM,5%,0.25W	01121	CB1635
R16	315-0203-00			RES.,FXD,CMPSN:20K OHM,5%,0.25W	01121	CB2035
R17	315-0391-00			RES.,FXD,CMPSN:390 OHM,5%,0.25W	01121	CB3915
R18	311-1285-00			RES.,VAR,NONWIR:25K OHM,+/-10%,0.5W	73138	62PAS-331-0
R20	315-0102-00			RES.,FXD,CMPSN:1K OHM,5%,0.25W	01121	CB1025
R21	315-0102-00			RES.,FXD,CMPSN:1K OHM,5%,0.25W	01121	CB1025
R24	315-0471-00			RES.,FXD,CMPSN:470 OHM,5%,0.25W	01121	CB4715
R30	315-0433-00	B010100	B060271	RES.,FXD,CMPSN:43K OHM,5%,0.25W	01121	CB4335
R30	315-0203-00	B060272		RES.,FXD,CMPSN:20K OHM,5%,0.25W	01121	CB2035
R31	315-0181-00			RES.,FXD,CMPSN:180 OHM,5%,0.25W	01121	CB1815
R41	315-0102-00			RES.,FXD,CMPSN:1K OHM,5%,0.25W	01121	CB1025
R43	315-0102-00			RES.,FXD,CMPSN:1K OHM,5%,0.25W	01121	CB1025
R51	315-0123-00			RES.,FXD,CMPSN:12K OHM,5%,0.25W	01121	CB1235
R52	315-0512-00			RES.,FXD,CMPSN:5.1K OHM,5%,0.25W	01121	CB5125
R60	315-0182-00			RES.,FXD,CMPSN:1.8K OHM,5%,0.25W	01121	CB1825
R61	315-0102-00			RES.,FXD,CMPSN:1K OHM,5%,0.25W	01121	CB1025
R62	315-0272-00			RES.,FXD,CMPSN:2.7K OHM,5%,0.25W	01121	CB2725
R63	315-0182-00			RES.,FXD,CMPSN:1.8K OHM,5%,0.25W	01121	CB1825
R70	321-0273-00			RES.,FXD,FILM:6.81K OHM,1%,0.125W	75042	CEAT0-6811F
R86	321-0273-00			RES.,FXD,FILM:6.81K OHM,1%,0.125W	75042	CEAT0-6811F
R87	315-0510-00			RES.,FXD,CMPSN:51 OHM,5%,0.25W	01121	CB5105
R90	315-0100-00			RES.,FXD,CMPSN:10 OHM,5%,0.25W	01121	CB1005
R91	321-0178-00			RES.,FXD,FILM:698 OHM,1%,0.125W	75042	CEAT0-6980F
R92	315-0103-00			RES.,FXD,CMPSN:10K OHM,5%,0.25W	01121	CB1035
R93	321-0178-00			RES.,FXD,FILM:698 OHM,1%,0.125W	75042	CEAT0-6980F
R94	315-0103-00			RES.,FXD,CMPSN:10K OHM,5%,0.25W	01121	CB1035
R95	321-0260-00			RES.,FXD,FILM:4.99K OHM,1%,0.125W	75042	CEAT0-4991F
R97	321-0260-00			RES.,FXD,FILM:4.99K OHM,1%,0.125W	75042	CEAT0-4991F

Ckt No.	Tektronix Part No.	Serial/Model No. Eff	Dscont	Name & Description	Mfr Code	Mfr Part Number
R99	315-0392-00			RES.,FXD,CMPSN:3.9K OHM,5%,0.25W	01121	CB3925
R101	315-0470-00			RES.,FXD,CMPSN:47 OHM,5%,0.25W	01121	CB4705
R103	315-0470-00			RES.,FXD,CMPSN:47 OHM,5%,0.25W	01121	CB4705
R105	315-0101-00			RES.,FXD,CMPSN:100 OHM,5%,0.25W	01121	CB1015
R107	321-0185-00			RES.,FXD,FILM:825 OHM,1%,0.125W	75042	CEAT0-8250F
R109	311-1276-00			RES.,VAR,NONWIR:50 OHM,+/-10%,0.5W	73138	62PAS-325-0
R110	315-0102-00			RES.,FXD,CMPSN:1K OHM,5%,0.25W	01121	CB1025
R112	315-0103-00			RES.,FXD,CMPSN:10K OHM,5%,0.25W	01121	CB1035
R113	321-0339-00			RES.,FXD,FILM:33.2K OHM,1%,0.125W	75042	CEAT0-3322F
R114	315-0822-00			RES.,FXD,CMPSN:8.2K OHM,5%,0.25W	01121	CB8225
R115	311-1287-00			RES.,VAR,NONWIR:1000 OHM,+/-10%,0.5W	73138	62PAS-333-0
R121	315-0562-00			RES.,FXD,CMPSN:5.6K OHM,5%,0.25W	01121	CB5625
R123	315-0333-00			RES.,FXD,CMPSN:33K OHM,5%,0.25W	01121	CB3335
R125	315-0473-00			RES.,FXD,CMPSN:47K OHM,5%,0.25W	01121	CB4735
R127	315-0133-00			RES.,FXD,CMPSN:13K OHM,5%,0.25W	01121	CB1335
R128	321-0297-00			RES.,FXD,FILM:12.1K OHM,1%,0.125W	75042	CEAT0-1212F
R129	321-0297-00			RES.,FXD,FILM:12.1K OHM,1%,0.125W	75042	CEAT0-1212F
R131	315-0471-00			RES.,FXD,CMPSN:470 OHM,5%,0.25W	01121	CB4715
R133	315-0471-00			RES.,FXD,CMPSN:470 OHM,5%,0.25W	01121	CB4715
R135	315-0330-00			RES.,FXD,CMPSN:33 OHM,5%,0.25W	01121	CB3305
R137	315-0330-00			RES.,FXD,CMPSN:33 OHM,5%,0.25W	01121	CB3305
R139	315-0100-00			RES.,FXD,CMPSN:10 OHM,5%,0.25W	01121	CB1005
R142	315-0471-00			RES.,FXD,CMPSN:470 OHM,5%,0.25W	01121	CB4715
R146	315-0471-00			RES.,FXD,CMPSN:470 OHM,5%,0.25W	01121	CB4715
R152	315-0471-00			RES.,FXD,CMPSN:470 OHM,5%,0.25W	01121	CB4715
R156	315-0471-00			RES.,FXD,CMPSN:470 OHM,5%,0.25W	01121	CB4715
R161	315-0470-00			RES.,FXD,CMPSN:47 OHM,5%,0.25W	01121	CB4705
R163	315-0470-00			RES.,FXD,CMPSN:47 OHM,5%,0.25W	01121	CB4705
R173	321-0339-00			RES.,FXD,FILM:33.2K OHM,1%,0.125W	75042	CEAT0-3322F
R175	311-1287-00			RES.,VAR,NONWIR:1000 OHM,+/-10%,0.5W	73138	62PAS-333-0
R181	315-0562-00			RES.,FXD,CMPSN:5.6K OHM,5%,0.25W	01121	CB5625
R183	315-0333-00			RES.,FXD,CMPSN:33K OHM,5%,0.25W	01121	CB3335
R184	315-0473-00			RES.,FXD,CMPSN:47K OHM,5%,0.25W	01121	CB4735
R185	315-0101-00			RES.,FXD,CMPSN:100 OHM,5%,0.25W	01121	CB1015
R186	321-0185-00			RES.,FXD,FILM:825 OHM,1%,0.125W	75042	CEAT0-8250F
R187	315-0133-00			RES.,FXD,CMPSN:13K OHM,5%,0.25W	01121	CB1335
R188	321-0297-00			RES.,FXD,FILM:12.1K OHM,1%,0.125W	75042	CEAT0-1212F
R189	321-0297-00			RES.,FXD,FILM:12.1K OHM,1%,0.125W	75042	CEAT0-1212F
R190	311-1276-00			RES.,VAR,NONWIR:50 OHM,+/-10%,0.5W	73138	62PAS-325-0
R191	321-0232-00			RES.,FXD,FILM:2.55K OHM,1%,0.125W	75042	CEAT0-2551F
R193	321-0262-00			RES.,FXD,FILM:5.23K OHM,1%,0.125W	75042	CEAT0-5231F
R199	315-0431-00			RES.,FXD,CMPSN:430 OHM,5%,0.25W	01121	CB4315
R200	315-0472-00			RES.,FXD,CMPSN:4.7K OHM,5%,0.25W	01121	CB4725
R201	315-0103-00			RES.,FXD,CMPSN:10K OHM,5%,0.25W	01121	CB1035
R202	321-0135-00			RES.,FXD,FILM:249 OHM,1%,0.125W	75042	CEAT0-2490F
R203	321-0135-00			RES.,FXD,FILM:249 OHM,1%,0.125W	75042	CEAT0-2490F
R204	321-0133-00			RES.,FXD,FILM:237 OHM,1%,0.125W	75042	CEAT0-2370F
R205	311-1279-00			RES.,VAR,NONWIR:500 OHM,10%,0.50W	73138	62PAS-322-0
R207	321-0306-00			RES.,FXD,FILM:15K OHM,1%,0.125W	75042	CEAT0-1502F
R209	321-0220-00			RES.,FXD,FILM:1.91K OHM,1%,0.125W	75042	CEAT0-1911F
R211	321-0232-00			RES.,FXD,FILM:2.55K OHM,1%,0.125W	75042	CEAT0-2551F
R213	321-0262-00			RES.,FXD,FILM:5.23K OHM,1%,0.125W	75042	CEAT0-5231F
R214	315-0822-00			RES.,FXD,CMPSN:8.2K OHM,5%,0.25W	01121	CB8225

Ckt No.	Tektronix Part No.	Serial/Model No. Eff	Dscont	Name & Description	Mfr Code	Mfr Part Number
R219	315-0431-00			RES.,FXD,CMPSN:430 OHM,5%,0.25W	01121	CB4315
R220	315-0472-00			RES.,FXD,CMPSN:4.7K OHM,5%,0.25W	01121	CB4725
R221	315-0103-00			RES.,FXD,CMPSN:10K OHM,5%,0.25W	01121	CB1035
R222	321-0135-00			RES.,FXD,FILM:249 OHM,1%,0.125W	75042	CEAT0-2490F
R223	315-0135-00			RES.,FXD,CMPSN:1.3M OHM,5%,0.25W	01121	CB1355
R224	321-0133-00			RES.,FXD,FILM:237 OHM,1%,0.125W	75042	CEAT0-2370F
R225	311-1279-00			RES.,VAR,NONWIR:500 OHM,10%,0.50W	73138	62PAS-322-0
R227	321-0306-00			RES.,FXD,FILM:15K OHM,1%,0.125W	75042	CEAT0-1502F
R229	321-0220-00			RES.,FXD,FILM:1.91K OHM,1%,0.125W	75042	CEAT0-1911F
R240	315-0562-00			RES.,FXD,CMPSN:5.6K OHM,5%,0.25W	01121	CB5625
R241	315-0562-00			RES.,FXD,CMPSN:5.6K OHM,5%,0.25W	01121	CB5625
R242	315-0222-00			RES.,FXD,CMPSN:2.2K OHM,5%,0.25W	01121	CB2225
R243	315-0241-00			RES.,FXD,CMPSN:240 OHM,5%,0.25W	01121	CB2415
R245	315-0361-00			RES.,FXD,CMPSN:360 OHM,5%,0.25W	01121	CB3615
R247	315-0122-00			RES.,FXD,CMPSN:1.2K OHM,5%,0.25W	01121	CB1225
R248	315-0182-00			RES.,FXD,CMPSN:1.8K OHM,5%,0.25W	01121	CB1825
T140	120-0584-00			XFMR,TOROID:THREE 10 TURN WINDINGS	80009	120-0584-00
T150	120-0584-00			XFMR,TOROID:THREE 10 TURN WINDINGS	80009	120-0584-00
U00	156-0145-00			MICROCIRCUIT,DI:QUAD 2-INPUT POS NAND BFR	01295	SN7438N
U01	156-0145-00			MICROCIRCUIT,DI:QUAD 2-INPUT POS NAND BFR	01295	SN7438N
U03	156-0058-00			MICROCIRCUIT,DI:HEX INVERTER	04713	MC7404P
U04	156-0145-00			MICROCIRCUIT,DI:QUAD 2-INPUT POS NAND BFR	01295	SN7438N
U05	156-0165-00			MICROCIRCUIT,DI:DUAL 4-INPUT POS NOR GATE	01295	SN7425N
U06	156-0129-00			MICROCIRCUIT,DI:QUAD 2-INPUT GATE	01295	SN7408N
U10	156-0032-00			MICROCIRCUIT,DI:4-BIT BINARY COUNTER	01295	SN7493AN
U11	156-0145-00			MICROCIRCUIT,DI:QUAD 2-INPUT POS NAND BFR	01295	SN7438N
U12	156-0145-00			MICROCIRCUIT,DI:QUAD 2-INPUT POS NAND BFR	01295	SN7438N
U13	156-0034-00			MICROCIRCUIT,DI:DUAL 4-INPUT NAND GATE	01295	SN7420N
U14	156-0163-00			MICROCIRCUIT,DI:TRIPLE 3-INPUT POS AND GATE	18324	N7411A
U16	156-0172-00			MICROCIRCUIT,DI:DUAL MONOSTABLE MV	01295	SN74123N
U20	156-0032-00			MICROCIRCUIT,DI:4-BIT BINARY COUNTER	01295	SN7493AN
U21	156-0142-00			MICROCIRCUIT,DI:SINGLE 50 MHZRIPPLE CNTR	80009	156-0142-00
U22	156-0171-00			MICROCIRCUIT,DI:QUAD 2-INPUT NOR GATE	01295	SN7432N
U23	156-0041-00			MICROCIRCUIT,DI:DUAL D-TYPE FLIP-FLOP	27014	DM7474N
U24	156-0250-00			MICROCIRCUIT,DI:10 BIT BUFFERREG	18324	N8202N
U26	156-0249-00			MICROCIRCUIT,DI:10 BIT INV BUFFER REG	27014	N8203N
U30	156-0143-00			MICROCIRCUIT,DI:RETRIGGERABLEMONOSTABLE/MV	01295	SN74122N
U31	156-0129-00			MICROCIRCUIT,DI:QUAD 2-INPUT GATE	01295	SN7408N
U32	156-0041-00			MICROCIRCUIT,DI:DUAL D-TYPE FLIP-FLOP	27014	DM7474N
U33	156-0248-00			MICROCIRCUIT,DI:FULLY SYNC BINARY COUNTER	01295	SN74163N
U36	156-0165-00			MICROCIRCUIT,DI:DUAL 4-INPUT POS NOR GATE	01295	SN7425N
U40	156-0034-00			MICROCIRCUIT,DI:DUAL 4-INPUT NAND GATE	01295	SN7420N
U41	156-0037-00			MICROCIRCUIT,DI:2-INPUT +AND/OR/INVERT GATE	01295	SN7451N
U42	156-0058-00			MICROCIRCUIT,DI:HEX INVERTER	04713	MC7404P
U43	156-0043-00			MICROCIRCUIT,DI:2-INPUT NOR GATE	01295	SN7402N
U44	156-0249-00			MICROCIRCUIT,DI:10 BIT INV BUFFER REG	27014	N8203N
U46	156-0249-00			MICROCIRCUIT,DI:10 BIT INV BUFFER REG	27014	N8203N
U50	156-0120-00			MICROCIRCUIT,DI:SINGLE 4-BIT R/L SHIFT REG	01295	SN7495AN
U51	156-0172-00			MICROCIRCUIT,DI:DUAL MONOSTABLE MV	01295	SN74123N
U52	156-0032-00			MICROCIRCUIT,DI:4-BIT BINARY COUNTER	01295	SN7493AN
U53	156-0041-00			MICROCIRCUIT,DI:DUAL D-TYPE FLIP-FLOP	27014	DM7474N
U54	156-0150-00			MICROCIRCUIT,DI:QUAD 2-INPUT POS NAND BFR	01295	SN7437N

Ckt No.	Tektronix Part No.	Serial/Model No. Eff	Dscont	Name & Description	Mfr Code	Mfr Part Number
U55	156-0137-00			MICROCIRCUIT,DI:SINGLE 10-BITDAC	06665	AIMDAC-100ACT2
U56	156-0137-00			MICROCIRCUIT,DI:SINGLE 10-BITDAC	06665	AIMDAC-100ACT2
U62	156-0058-00			MICROCIRCUIT,DI:HEX INVERTER	04713	MC7404P
U64	156-0129-00			MICROCIRCUIT,DI:QUAD 2-INPUT GATE	01295	SN7408N
U70	156-0200-00			MICROCIRCUIT,LI:LOW INPUT/OFFSET CURRENT	18324	N5556V
U86	156-0200-00			MICROCIRCUIT,LI:LOW INPUT/OFFSET CURRENT	18324	N5556V
U92	156-0158-00			MICROCIRCUIT,LI:DUAL OPERATIONAL AMPLIFIER	80009	156-0158-00
VR90	152-0166-00			SEMICOND DEVICE:ZENER,0.4W,6.2V,5%	81483	69-9035
VR140	152-0166-00			SEMICOND DEVICE:ZENER,0.4W,6.2V,5%	81483	69-9035
VR150	152-0166-00			SEMICOND DEVICE:ZENER,0.4W,6.2V,5%	81483	69-9035
Y62	158-0070-00			XTAL UNIT,QTZ:2 MHZ,+/-0.01%	80009	158-0070-00

MECHANICAL PARTS

Fig. & Index No.	Tektronix Part No.	Serial/Model No. Eff	Dscont	Qty	1 2 3 4 5	Name & Description	Mfr Code	Mfr Part Number
1	----- -----			1		CKT CARD ASSY:DISPLAY GENERATOR		
	----- -----			-		CKT CARD ASSY INCLUDES:		
2	131-1003-00			4		. CONNECTOR BODY,:CKT BD MT,3 PRONG	80009	131-1003-00
3	136-0252-04			192		. CONTACT,ELEC:0.188 INCH LONG	22526	75060
	136-0254-01			2		. CONTACT,ELEC:	00779	1331892-5
4	105-0144-00			1		. EJECTOR CKT CD:	18677	S203

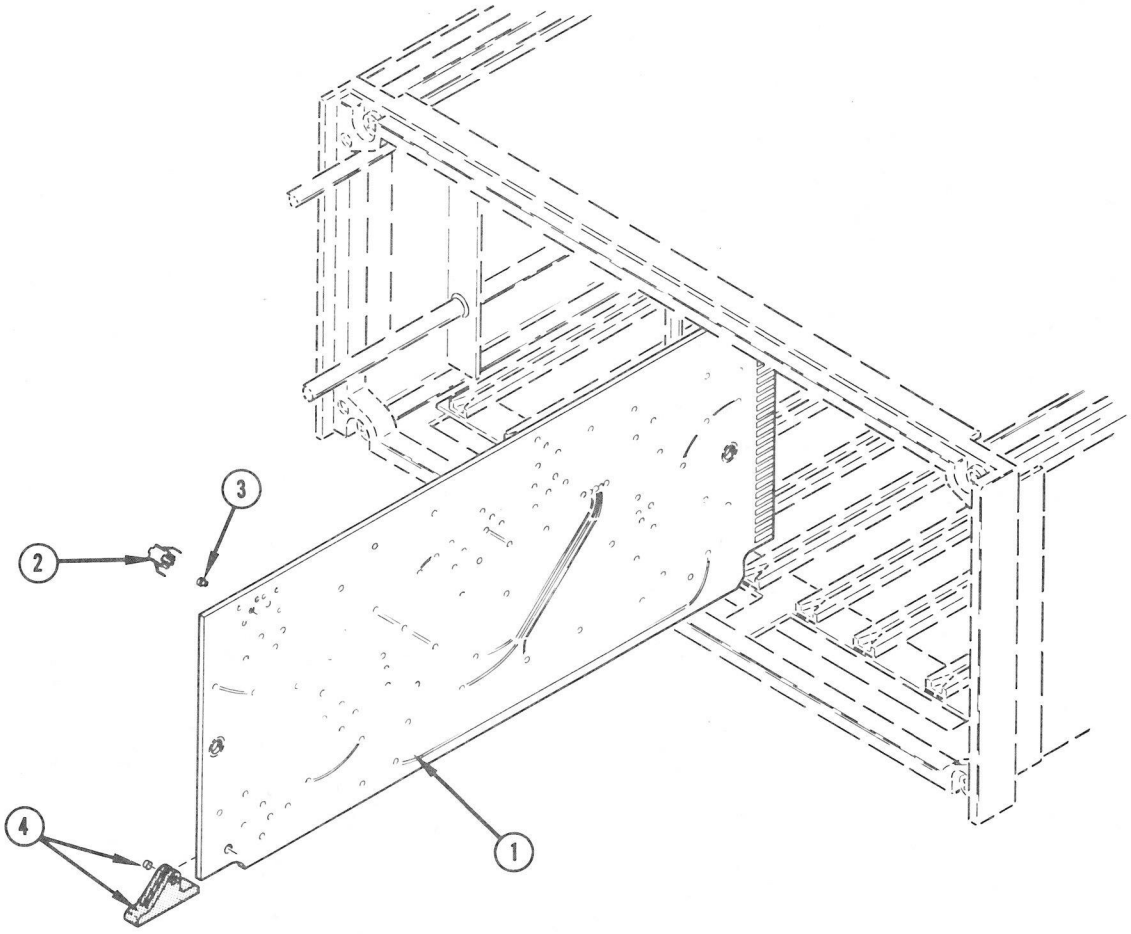

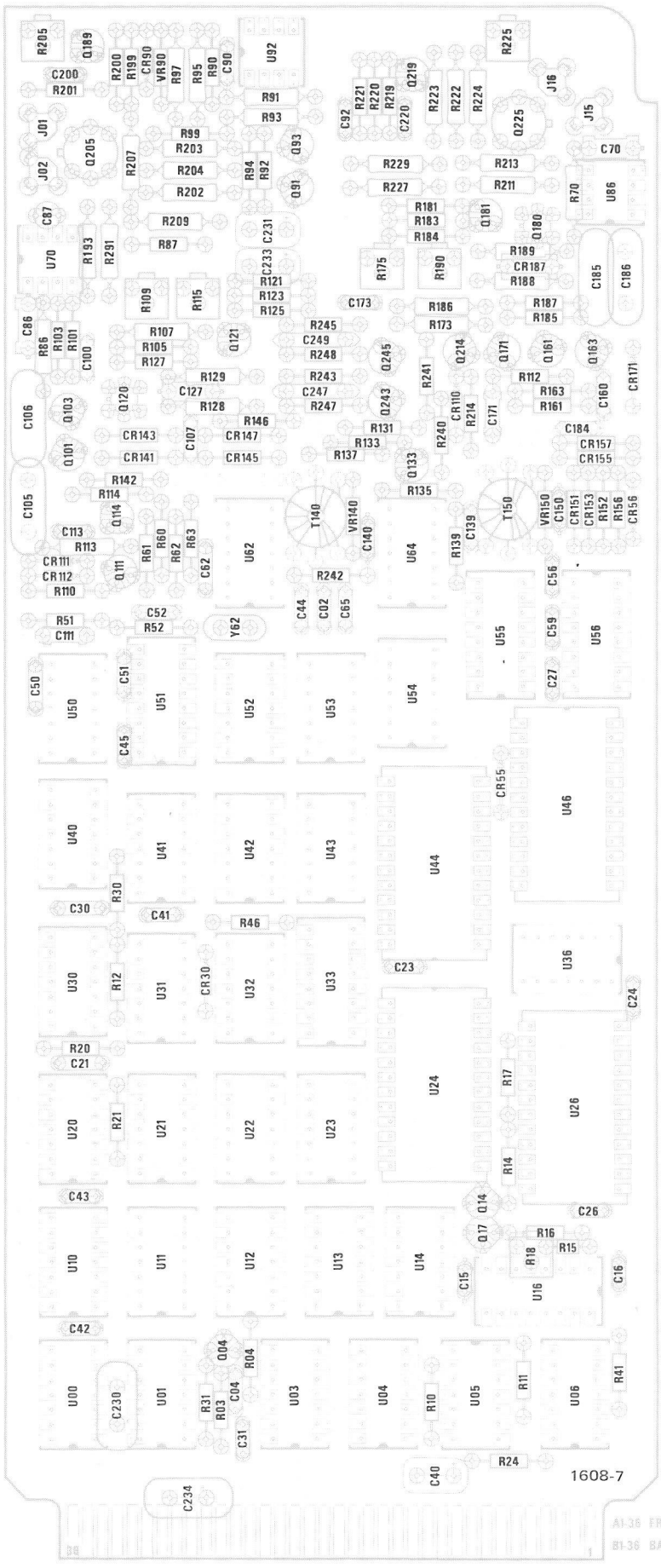

DISPLAY GENERATOR COMPONENT LOCATION

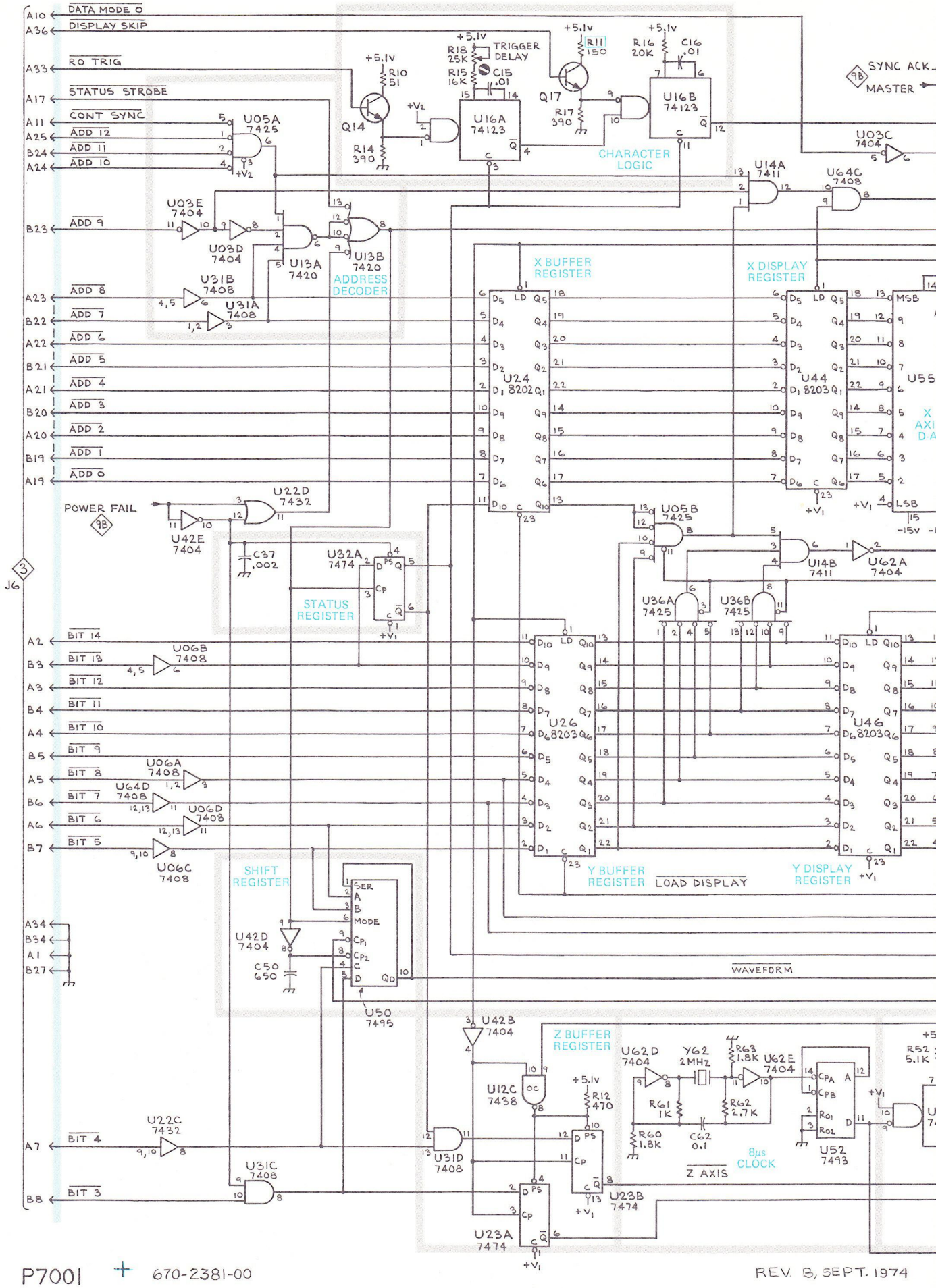

P7001 + 670-2381-00 REV. B, SEPT. 1974

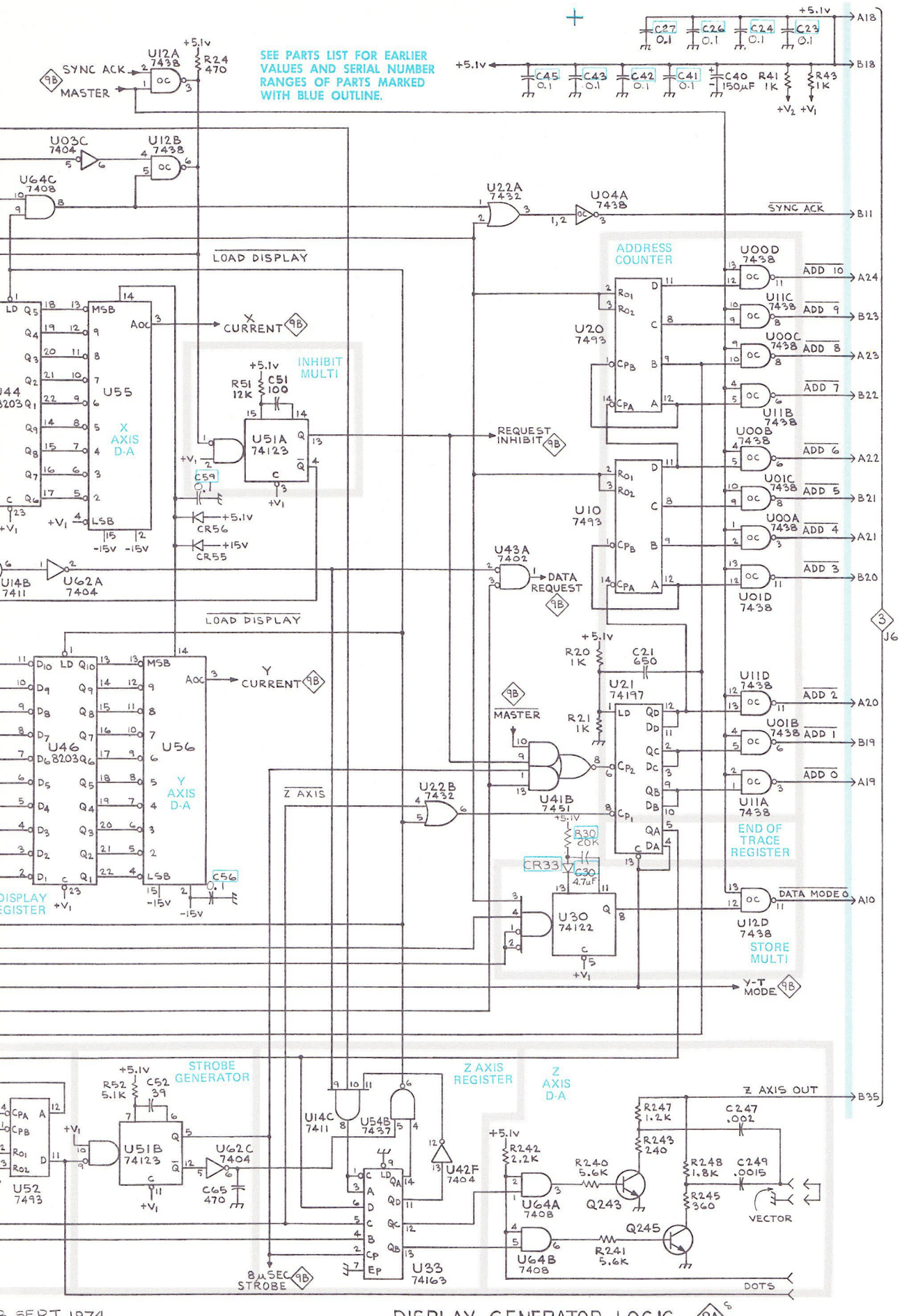

DISPLAY GENERATOR LOGIC 9A

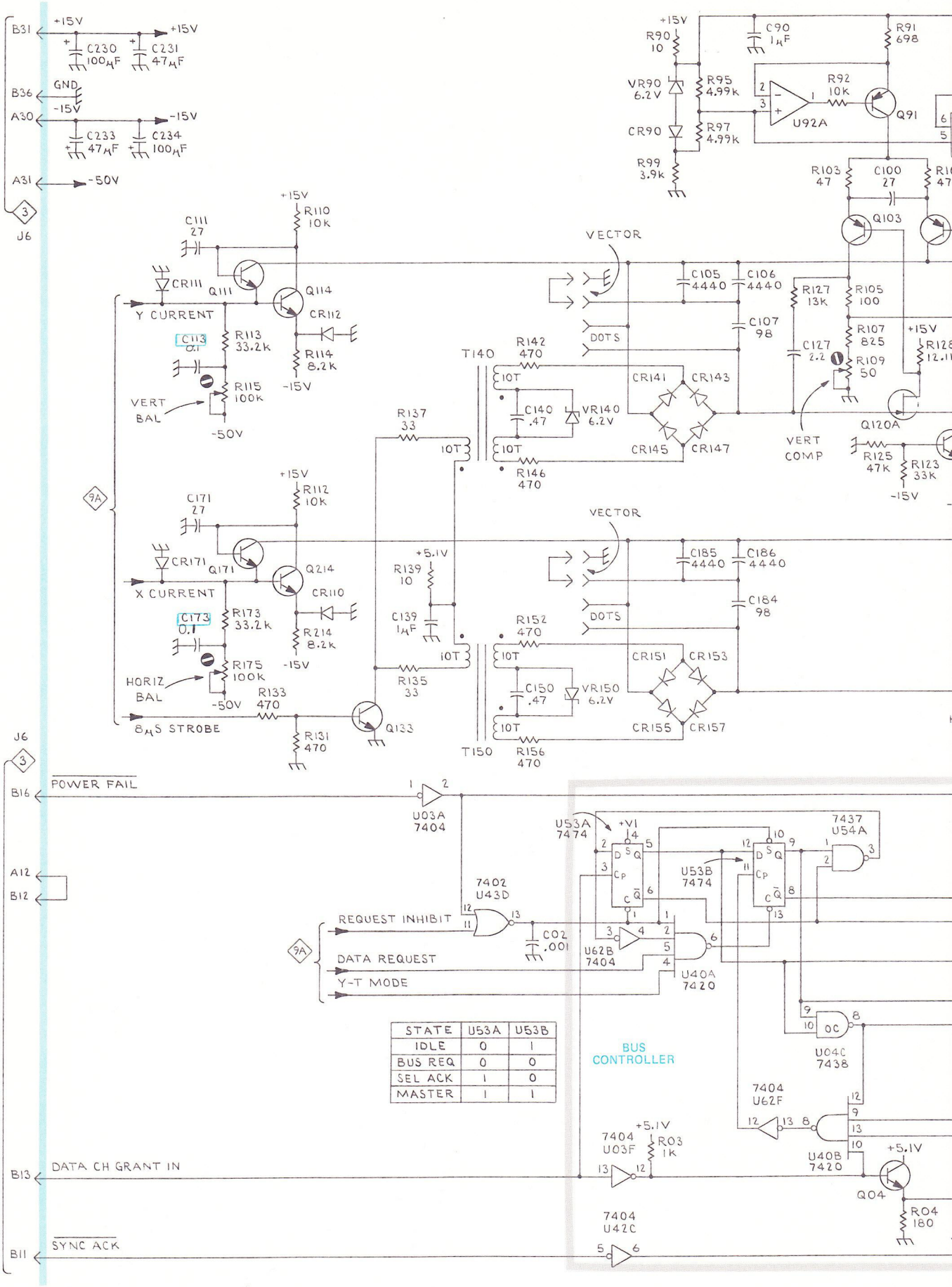

STATE	U53A	U53B
IDLE	0	1
BUS REQ	0	0
SEL ACK	1	0
MASTER	1	1

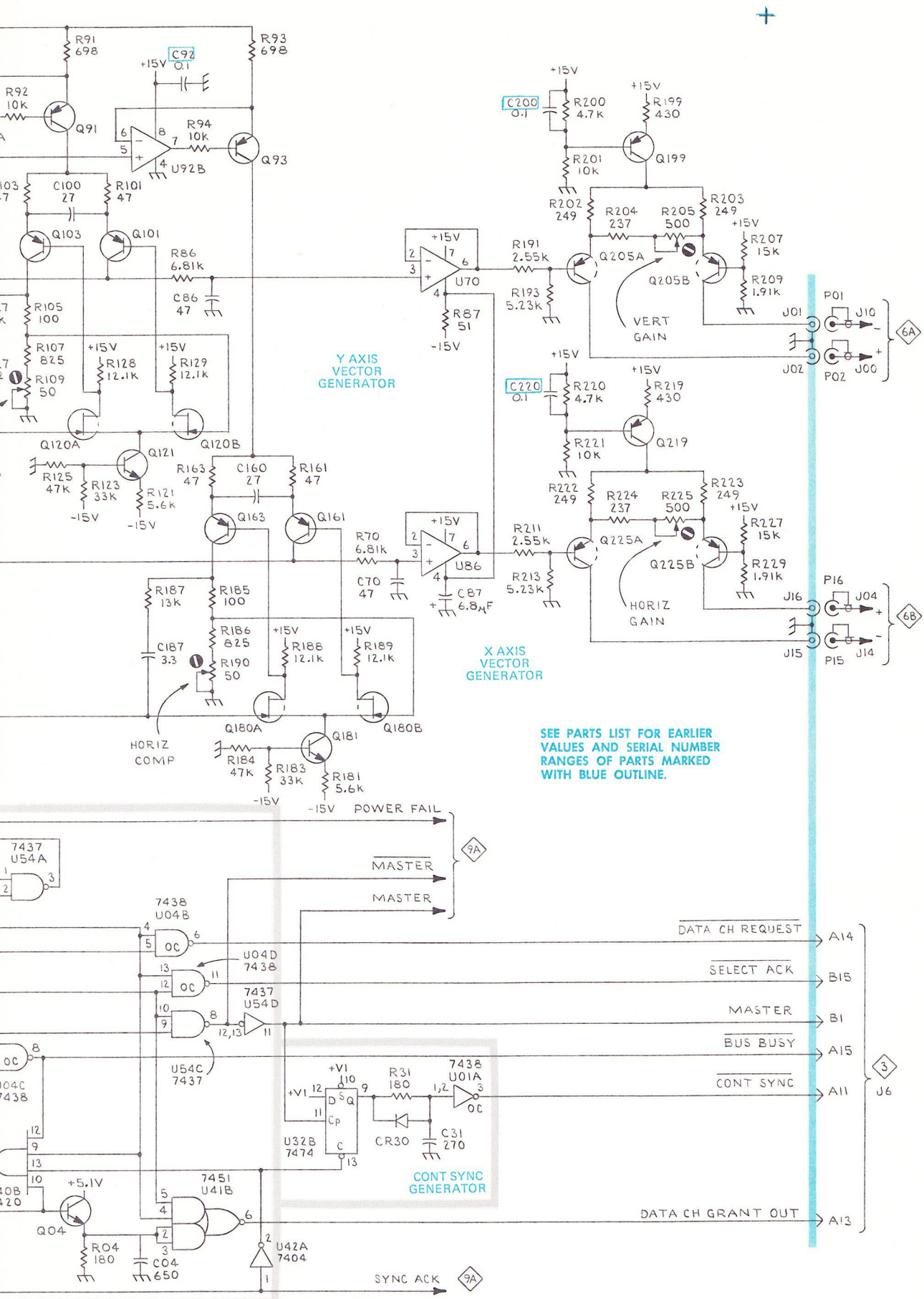
Y AXIS VECTOR GENERATOR
X AXIS VECTOR GENERATOR
CONT SYNC GENERATOR
VERT GAIN
HORIZ GAIN
HORIZ COMP
POWER FAIL
MASTER
MASTER
DATA CH REQUEST
SELECT ACK
MASTER
BUS BUSY
CONT SYNC
DATA CH GRANT OUT
SYNC ACK
SEE PARTS LIST FOR EARLIER VALUES AND SERIAL NUMBER RANGES OF PARTS MARKED WITH BLUE OUTLINE.

Tektronix
COMMITTED TO EXCELLENCE

MANUAL CHANGE INFORMATION

Change Reference: M34460 Date: 3-8-79

Product: P7001 070-1608-00 EFF SN B100662

CHANGE	DESCRIPTION

ELECTRICAL PARTS LIST CHANGES

CHANGE TO:

CR141 CR143 CR145 CR147	153-0053-00	SEMICOND DEVICE:SILICON,MATCHED SET OF FOUR (152-0322-00)
CR151 CR153 CR155 CR157	153-0053-00	SEMICOND DEVICE:SILICON,MATCHED SET OF FOUR (152-0322-00)

Tektronix®
COMMITTED TO EXCELLENCE

MANUAL CHANGE INFORMATION

Change Reference: M34035 Date: 6-6-79

Product: P7001 DISPLAY GENERATOR 070-1608-00 EFF SN B100681

CHANGE	DESCRIPTION

ELECTRICAL PARTS LIST CHANGES

CHANGE TO:

U00	156-0145-02	MICROCIRCUIT,DI:QUAD 2-INPUT POS NAND BFR
U01	156-0145-02	MICROCIRCUIT,DI:QUAD 2-INPUT POS NAND BFR
U04	156-0145-02	MICROCIRCUIT,DI:QUAD 2-INPUT POS NAND BFR
U11	156-0145-02	MICROCIRCUIT,DI:QUAD 2-INPUT POS NAND BFR
U12	156-0145-02	MICROCIRCUIT,DI:QUAD 2-INPUT POS NAND BFR
U23	156-0041-05	MICROCIRCUIT,DI:DUAL D-TYPE FLIP-FLOP
U32	156-0041-05	MICROCIRCUIT,DI:DUAL D-TYPE FLIP-FLOP
U53	156-0041-05	MICROCIRCUIT,DI:DUAL D-TYPE FLIP-FLOP